VISION PROFILE EXTRUSIONS

Sample Approval Form

Customer: Avanti Industries
Attention: Ralph Jordan
CSR: Helena Botelho

Die #: 15901C
Description: SH / SS WINDOW FRAME
Rigid Colour: WH-115
Flex Colour: N/A
Capstock Colour: BLK-3300

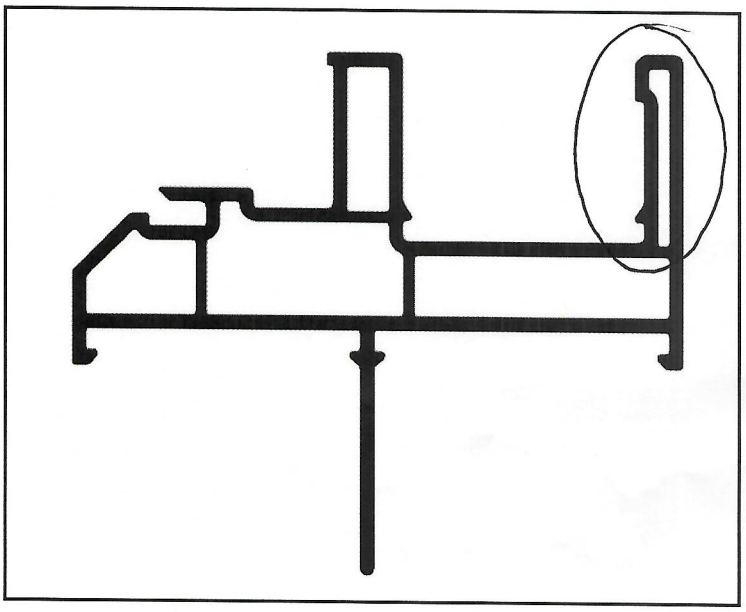

- ☐ Approved
- ☒ Approved with Comments
- ☐ Reject (Please Comment)
- ☐ Re-sample (Please Comment)

Comments: Sample is approved, however the wall circled in the picture above is not as straight as we would like. The wall seems to be leaning into the pocket slightly, making some dimensions .010" out of tolerance. We would like to see what can be done to make sure this wall stays straight.

Customer Signature:

Customer Name: Ryan Jordan
Position: 520-256-0261
Signature:
Date: 9/7/23

Vision Profile:

QC Manager: Tri Thai
Plant Manager: Pino Consolmagno

Notes:

(1) Please sign this form and return to your Customer Service Representative. Keep a copy for your records.
(2) Please sign a one foot sample. Return one (1) to your Customer Service Rep. and retain one (1) for your records.
(3) "Approved" indicated that the samples meet all the specifications required for your proper manufacturing and fabrication purposes. An "Approved" Status indicates Customer consent for Vision Profile to anodize and harden the tooling for production.
(4) "Approved with Comments" indicates that the sample does not meet all the specifications required for your proper manufacturing purposes, however, the issues can be addressed before production begins, without the need for re-sampling. Please consult with Vision Profile for any technical support you may need to address these issues.
(5) If samples are rejected, please explain in the comments section.
(6) If re-sampling is required, please explain in the comments section.